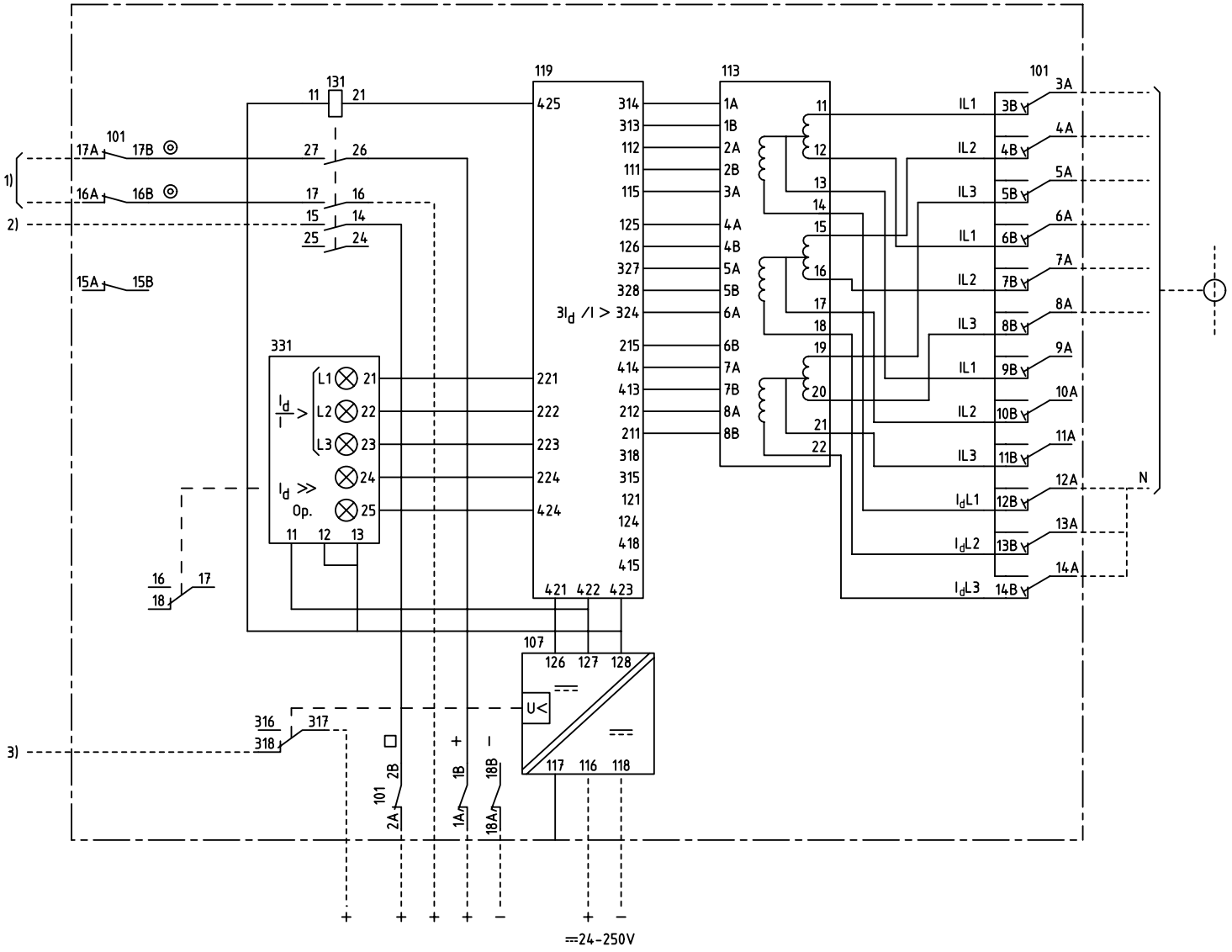

We reserve all rigths in this document and in the information contained therein. Reproduction, use or disclosure to third parties without express authority is strictly forbidden. © ABB Network Partner AB

ELCAD ID PAT/render DATE 2004-06-227:37

1MRK 000 319-AA

Issued in ARCADE

Prepared	94.44	C-H EINVALL	CIRCUIT DIAGRAM/KRETSSCHEMA RADSC DIFFERENTIAL PROTECTION DIFFERENTIALSKYDD
Approved	94.44	P JENÅKER	

Rev Ind | Revision | Reg No 1MRK
Based on | Pcl 890.000

ABB Network Partner AB

Resp dep PAT | Rev Ind 1 96.45 | Lang 82

1MRK 000 320-AA

Sheet 1 | Cont