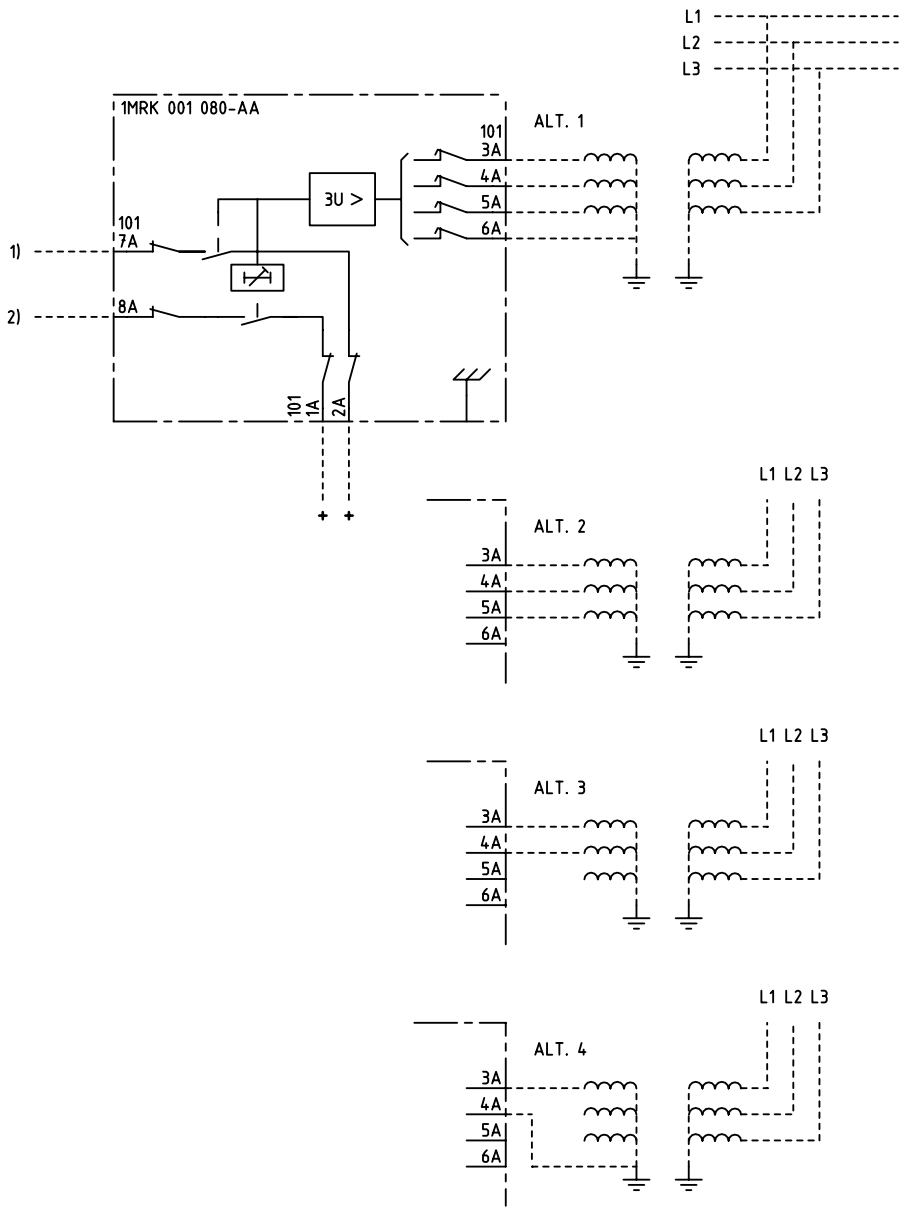

3U >

OVERVOLTAGE PROTECTION, DELAYED
SPÄNNINGSSTEGRINGSSKYDD, FÖRDRÖJT

1) START, ALARM
START, SIGNAL

2) TRIPPING
UTLÖSNING

We reserve all rigths in this document and in the information contained therein. Reproduction, use or disclosure to third parties without express authority is strictly forbidden. © ABB Network Partner AB

ELCAD ID PS/render DATE 2004-06-231:39

Issued in ARCADE

Prepared	97-09-12	C-H EINVALL/JE	
Approved	97-11-27	P JENÅKER	
Rev Ind	Revision	Reg No 7411	
Based on		Pcl 890.463	

TERMINAL DIAGRAM/UTTAGSSCHEMA
RAEDA OVERVOLTAGE PROTECTION
RAEDA SPÄNNINGSSTEGRINGSSKYDD

ABB Network Partner AB

Resp dep PS | Rev Ind - | Lang 82

1MRK 001 080-AAA

Sheet 1
Cont