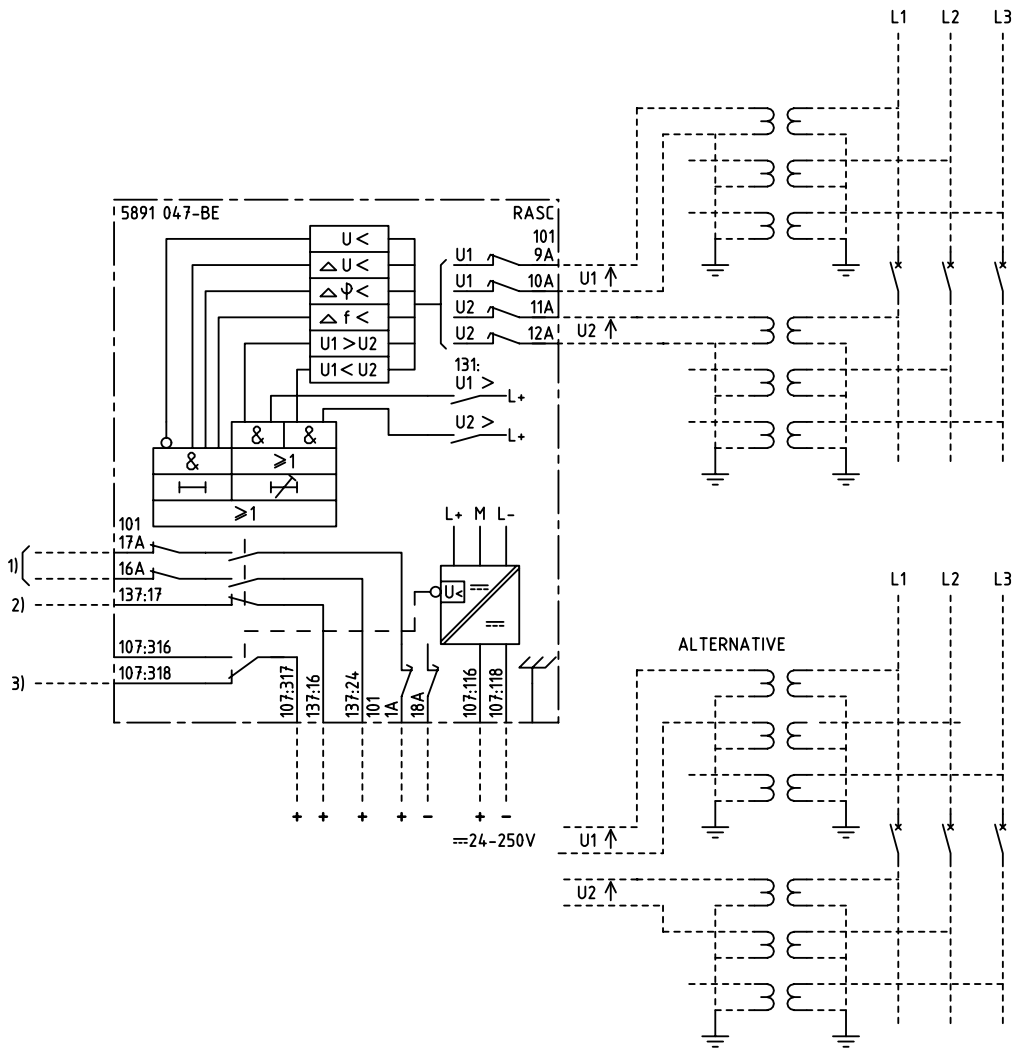

Δ U <
Δ φ <
Δ f <

SYNCHRO-CHECK PROTECTION
WITH VOLTAGE ENERGIZING UNIT

PARALLELLNINGSDON MED
SPÄNNINGSSÄTTNINGSENHET

42C

101	107	113	125	131	137

4U

101	RTXP 18
107	RXTUG 22H
113	RXNAA 4
125	RXNAB 2H
131	RXNAC 2H
137	RXME 1

1) CLOSING ETC.
TILLSLAG M.M

2) SUPERVISION ETC.
ÖVERVAKNING M.M

3) ALARM, LOSS OF AUX. VOLTAGE
SIGNAL, HJÄLPSP.BORTFALL

We reserve all rigths in this document and in the information contained therein. Reproduction, use or disclosure to third parties without express authority is strictly forbidden. © ABB Network Partner AB

ELCAD ID PS/render DATE 2004-10-0613:48 Issued in ARCADE

Prepared	98-03-02	C-H EINVALL/JE	
Approved	98-03-12	P JENÅKER	
Rev Ind	Revision	Reg No 5891	
Based on		Pcl 890.862	

TERMINAL DIAGRAM/UTTAGSSCHEMA
RASC SYNCRO-CHECK PROTECTION
RASC PARALLELLNINGSDON

ABB Network Partner AB

Resp dep PS | Rev Ind - | Lang en

5891 047-BEA

Sheet 1 | Cont