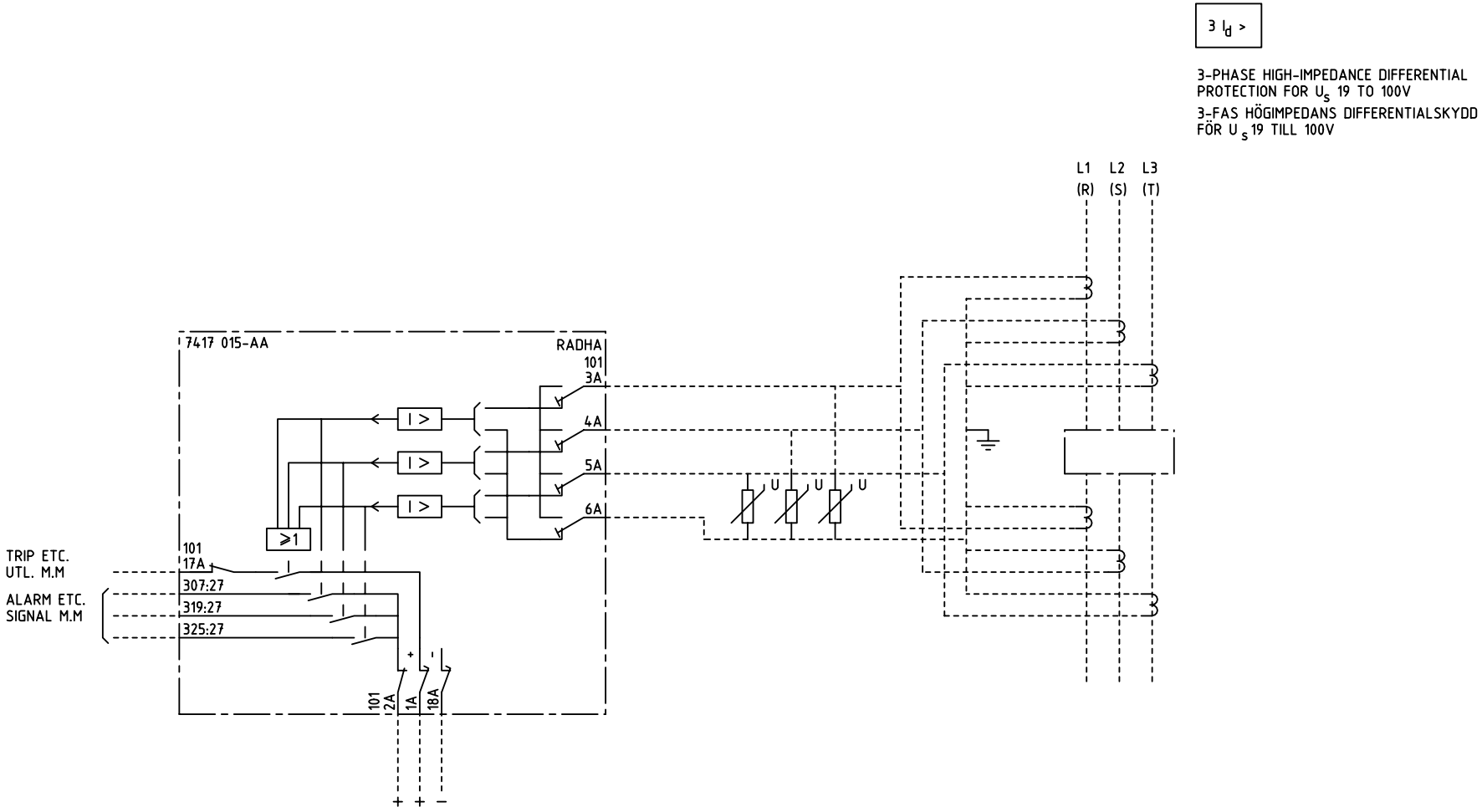


We reserve all rigths in this document and in the information contained therein. Reproduction, use or disclosure to third parties without express authority is strictly forbidden. © ABB Network Partner AB

ELCAD ID PAT/render DATE 2004-06-2121:47

Issued in ARCADE

| | | | |
|---|---|---|---|
| Prepared | 81 07 | R ÖSTLUND | |
| Approved | 81 07 | P JENÅKER | |
| Rev Ind | Revision | Reg No 7417 | |
| Based on | | Pcl 890.646 | |

TERMINAL DIAGRAM/KRETSSCHEMA
RADHA DIFFERENTIAL PROTECTION
DIFFERENTIALSKYDD

ABB Network Partner AB

Resp dep PAT | Rev Ind 3 96.45 | Lang 82

7417 015-AAA

Sheet 1

Cont