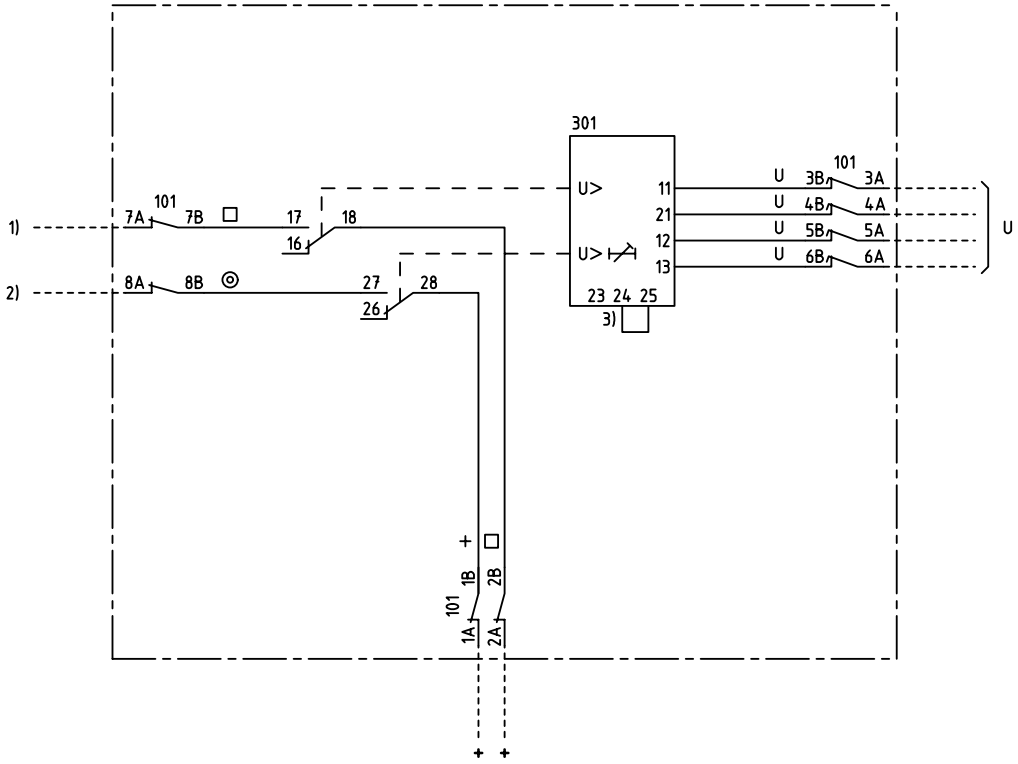

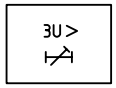

OVERVOLTAGE PROTECTION, DELAYED
SPÄNNINGSSTEGRINGSSKYDD, FÖRDRÖJT

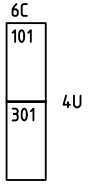

101 RTXP 8
301 RXEDA 1

1) START, ALARM
START, SIGNAL

2) TRIPPING
UTLÖSNING

3) WIRE MOVED FROM TERMINAL
24 TO 23 FOR MEASURING
3Ø+N

LEDARE FLYTTAD FRÅN UTTAG
24 TILL 23 FÖR MÄTNING
3Ø+N

We reserve all rigths in this document and in the information contained therein. Reproduction, use or disclosure to third parties without express authority is strictly forbidden. © ABB Network Partner AB

ELCAD ID PS/render DATE 2004-06-224:02

1MRK 001 079-AA

Issued in ARCADE

Prepared	97-09-12	C-H EINVALL/JE	CIRCUIT DIAGRAM/KRETSSCHEMA RAEDA OVERVOLTAGE PROTECTION RAEDA SPÄNNINGSSTEGRINGSSKYDD
Approved	97-11-27	P JENÅKER	

Rev Ind	Revision	Reg No	7411
Based on		Pcl	890.463

ABB Network Partner AB

Resp dep PS | Rev Ind - | Lang 82 | Sheet 1 | Cont

1MRK 001 080-AA