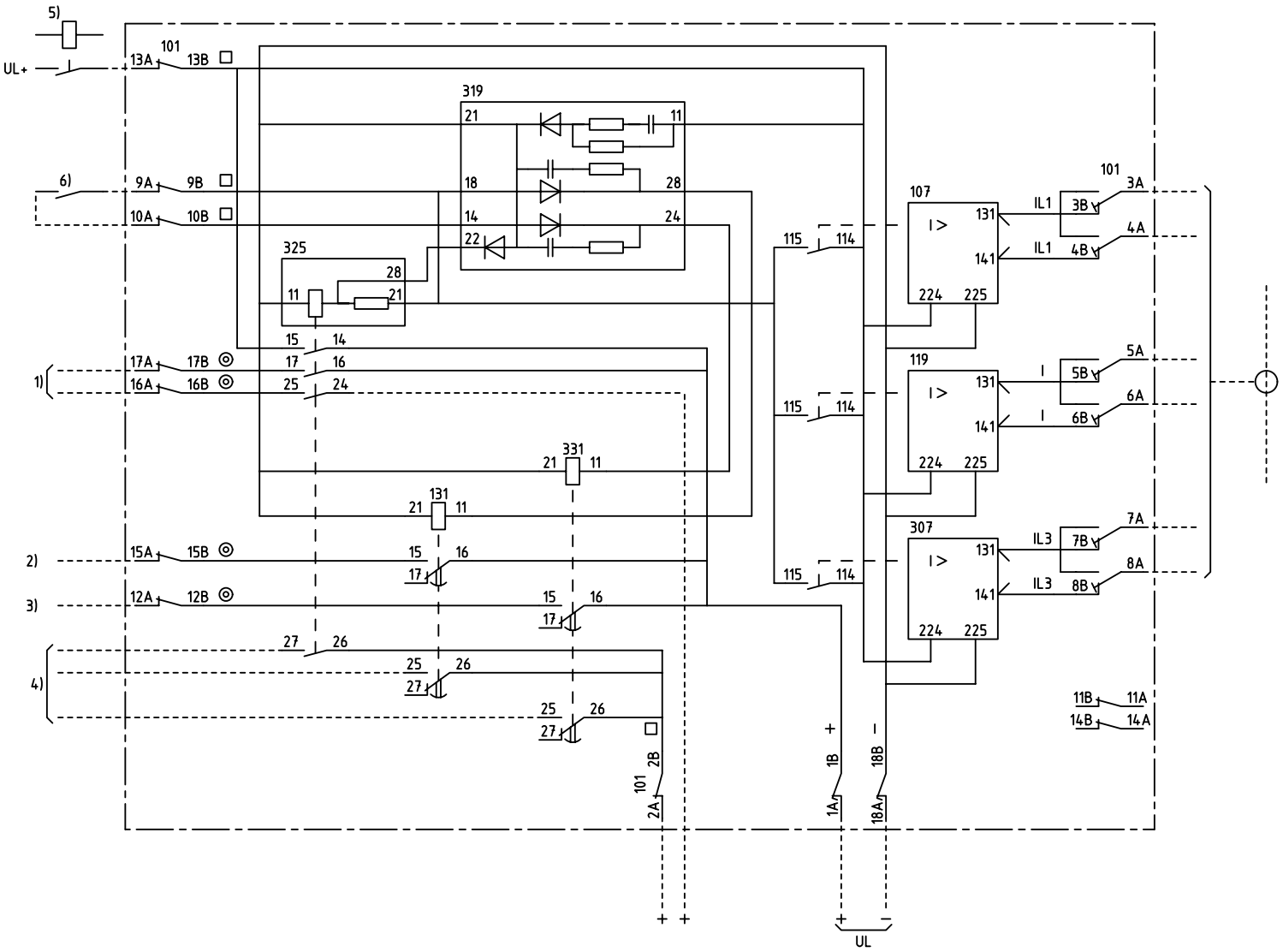

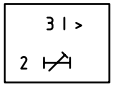

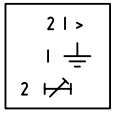

BREAKER FAILURE PROTECTION
WITH TWO TIME STEPS.
CURRENT DETECTORS IN 3-PHASES
OR IN 2-PHASES + EARTH

BRYTARFELSSKYDD MED TVÅ TIDSSTEG,
STRÖMRELÄER I TRE-FASER
ELLER I 2-FASER + JORD

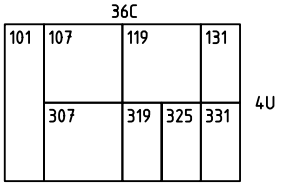

101	RTXP 18
107 119 307	RXIB 2
131	RXKL 1 (NORMAL TIME)
319	RXTCB 1
325	RXMS 1
331	RXKL 1 (SHORT TIME)

1) TRIPPING OF PRIMARY CIRCUIT BREAKER
UTLÖSNING AV PRIMÄRBRYTARE

2) TRIPPING OF BACK-UP CIRCUIT BREAKERS
UTLÖSNING AV RESERVBRYTARE

3) TRIPPING ETC., SHORT TIME
UTLÖSNING M.M., KORT TID

4) ALARM ETC.
SIGNAL ETC.

5) TRIP RELAY IN ANOTHER PROTECTION
UTLÖSNINGSRELÄ I ANNAT SKYDD

6) EXTERNAL CONDITION FOR START OF THE TIME RELAY FOR SHORT TIME
EXTERNT VILLKOR FÖR START AV TIDRELÄ FÖR KORT TID

We reserve all rigths in this document and in the information contained therein. Reproduction, use or disclosure to third parties without express authority is strictly forbidden. © ABB Network Partner AB

ELCAD ID TPTD/render DATE 2004-06-224:26

RK 651 213-AA

Issued in ARCADE

Prepared	76.27	C-H EINVALL	
Approved	76.27	Peter Jenøker	
Rev Ind	Revision	Reg No 7429	
Based on		Pcl 890.651	

CIRCUIT DIAGRAM/KRETSSCHEMA
RAICA BREAKER FAILURE PROTECTION
RAICA BRYTARFELSSKYDD

ABB Network Partner AB

Resp dep TPTD | Rev Ind 7 96.45 | Lang 82

7429 0003-AA

Sheet 1 | Cont