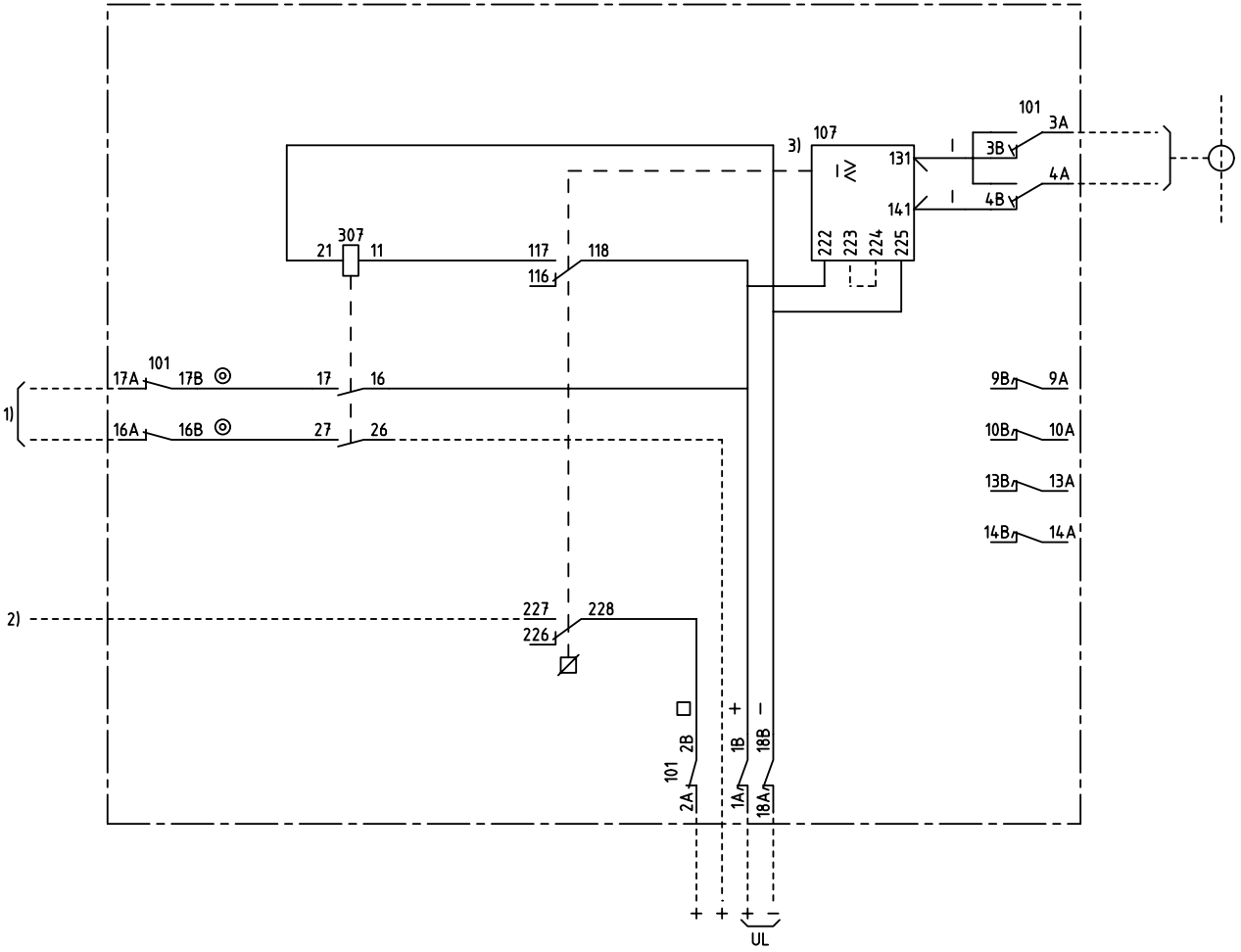

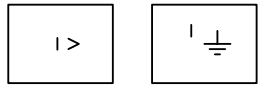

EARTH-FAULT OR 1-PHASE
OVERCURRENT PROTECTION, INSTANTANEOUS

JORDFELS- ELLER 1-FAS
ÖVERSTRÖMSSKYDD, MOMENTANT

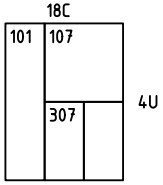

101 RTXP 18
107 RXIG 2
307 RXME 1

1) TRIPPING ETC.
UTLÖSNING M.M.

2) ALARM ETC.
SIGNAL M.M.

3) 223-224 CONNECTED AT UL=
— 24 RESP. 110-125V
223-224 FÖRBUNDNA VID UL=
— 24 RESP 110-125V

We reserve all rigths in this document and in the information contained therein. Reproduction, use or disclosure to third parties without express authority is strictly forbidden. © ABB Network Partner AB

ELCAD ID PAT/render DATE 2004-06-230:36 RK 651 115-BA Issued in ARCADE

Prepared	74 41	C-H EINVALL	CIRCUIT DIAGRAM/KRETSSCHEMA 1-PHASE OVERCURRENT PROTECTION 1-FAS ÖVERSTRÖMSSKYDD
Approved	74 41	P JENÅKER	
Rev Ind	Revision	Reg No 7432	
Based on		Pcl 890.651	

ABB Network Partner AB

Resp dep PAT | Rev Ind 3 96 45 | Lang 82

7432 0005-BA

Sheet 1 | Cont