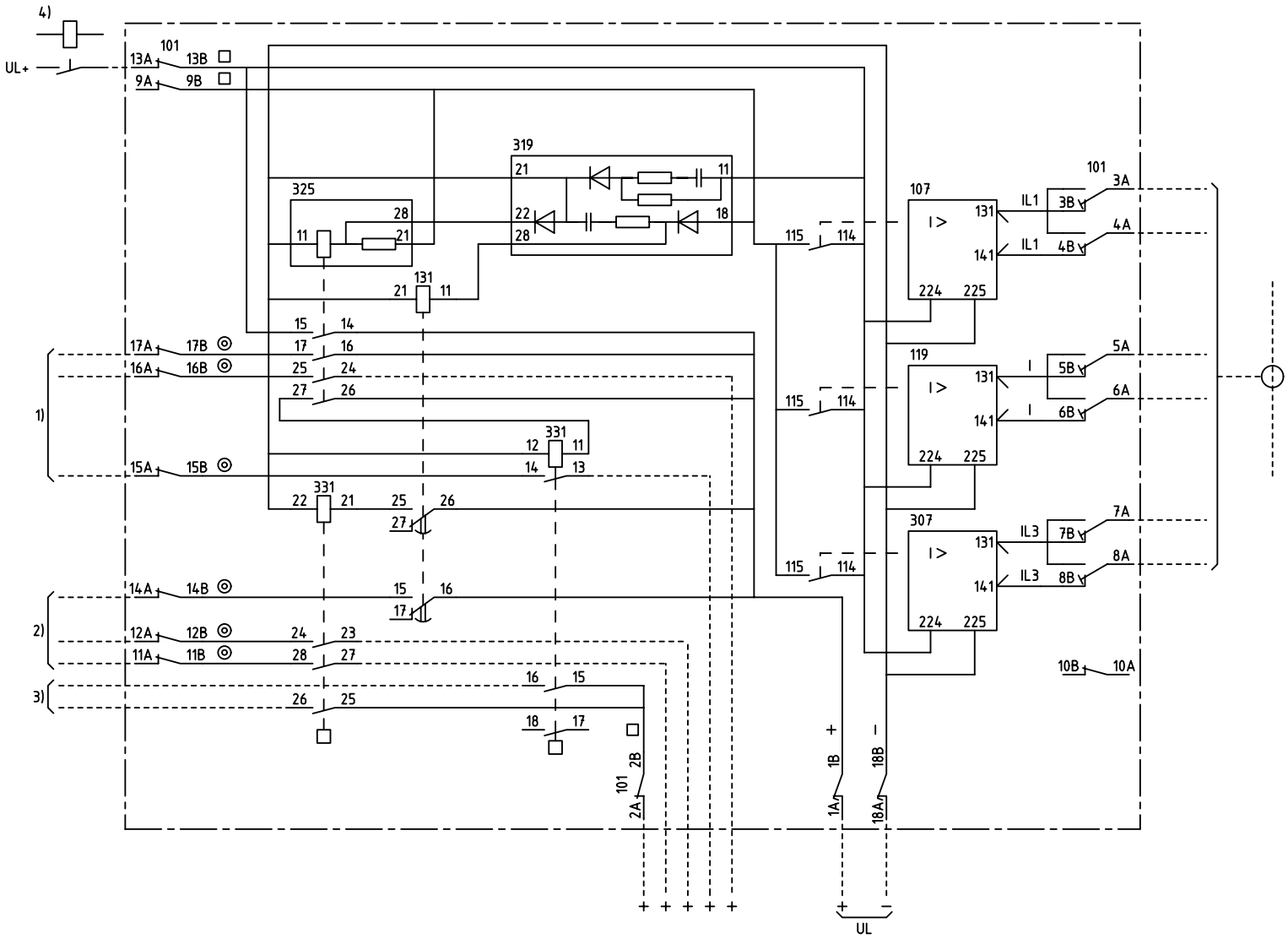

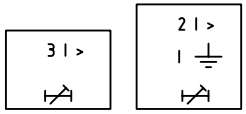

BREAKER FAILURE PROTECTION
WITH ONE TIME STEP.
CURRENT DETECTORS IN 3-PHASES
OR IN 2-PHASES + EARTH

BRYTARFELSSKYDD MED ETT TIDSSTEG,
STRÖMRELÄER I TRE-FASER
ELLER I 2-FASER + JORD

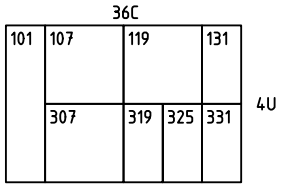

101	RTXP 18
107 119 307	RXIB 2
131	RXKL 1
319	RXTCB 1
325	RXMS 1
331	RXSF 1

1) TRIPPING OF PRIMARY CIRCUIT BREAKER
UTLÖSNING AV PRIMÄRBRYTARE

2) TRIP OF BACK-UP CIRCUIT BREAKERS
UTLÖSNING AV RESERVBRYTARE

3) ALARM ETC.
SIGNAL M.M

4) TRIP RELAY IN ANOTHER PROTECTION
UTLÖSNINGSRELÄ I ANNAT SKYDD

We reserve all rigths in this document and in the information contained therein. Reproduction, use or disclosure to third parties without express authority is strictly forbidden. © ABB Network Partner AB

ELCAD ID TPTD/render DATE 2004-06-230:41

RK 651 211-CA

Issued in ARCADE

Prepared	76.27	C-H EINVALL	
Approved	76.27	Peter Jenøker	
Rev Ind	Revision	Reg No 7429	
Based on		Pcl 890.651	

CIRCUIT DIAGRAM/KRETSSCHEMA
RAICA BREAKER FAILURE PROTECTION
RAICA BRYTARFELSSKYDD

ABB Network Partner AB

Resp dep TPTD | Rev Ind 9 97.06 | Lang 82

7429 0001-CA

Sheet 1 | Cont