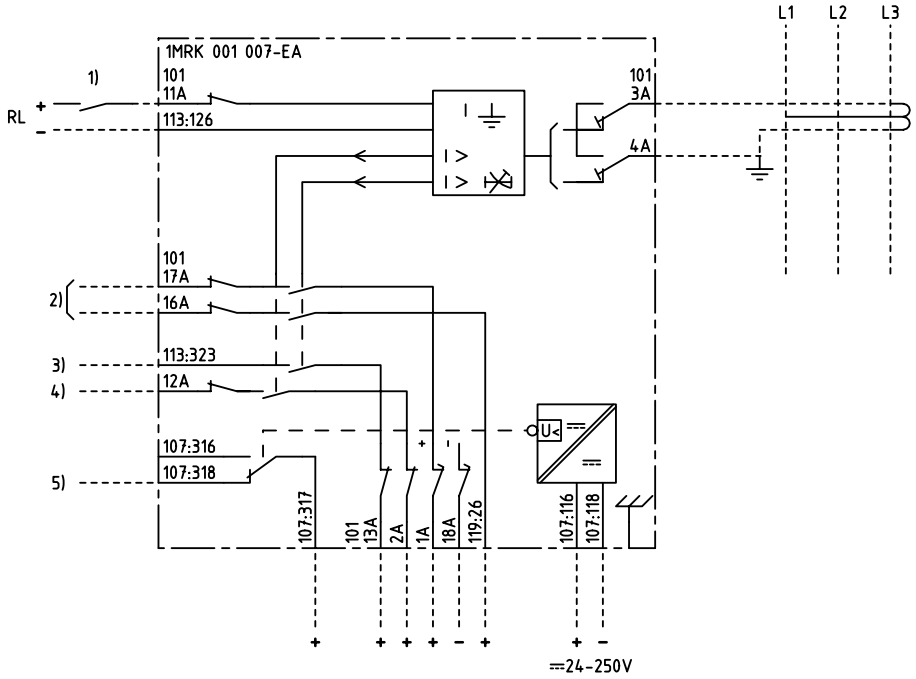

EARTH-FAULT PROTECTION
JORDFELSSKYDD

1) ENABLING OR BLOCKING
FRIGIVNING ELLER BLOCKERING

2) EARTH-FAULT, TRIPPING
JORDFEL, UTLÖSNING

3) EARTH-FAULT, ALARM ETC.
JORDFEL, ALARM M.M.

4) EARTH-FAULT, START
JORDFEL, START

5) LOSS OF AUXILIARY VOLTAGE
BORTFALL AV HJÄLPSPÄNNING

We reserve all rigths in this document and in the information contained therein. Reproduction, use or disclosure to third parties without express authority is strictly forbidden. © ABB Network Partner AB

ELCAD ID TPTD/render DATE 2004-06-2219:10 Issued in ARCADE

Prepared	96-06-18	H RAZA/J ERIKSSON	TERMINAL DIAGRAM/UTTAGSSCHEMA
Approved	96-07-02	P JENÅKER	RAIDG 1 OVERCURRENT E/F PROTECTION
			RAIDG 1 ÖVERSTRÖMS- OCH JORDFELSSKYDD
Rev Ind	Revision	Reg No 7411	ABB Network Partner AB
Based on		Pcl 890.475	

Resp dep TPTD	Rev Ind -	Lang en	
1MRK 001 007-EAA		Sheet 1	
		Cont	