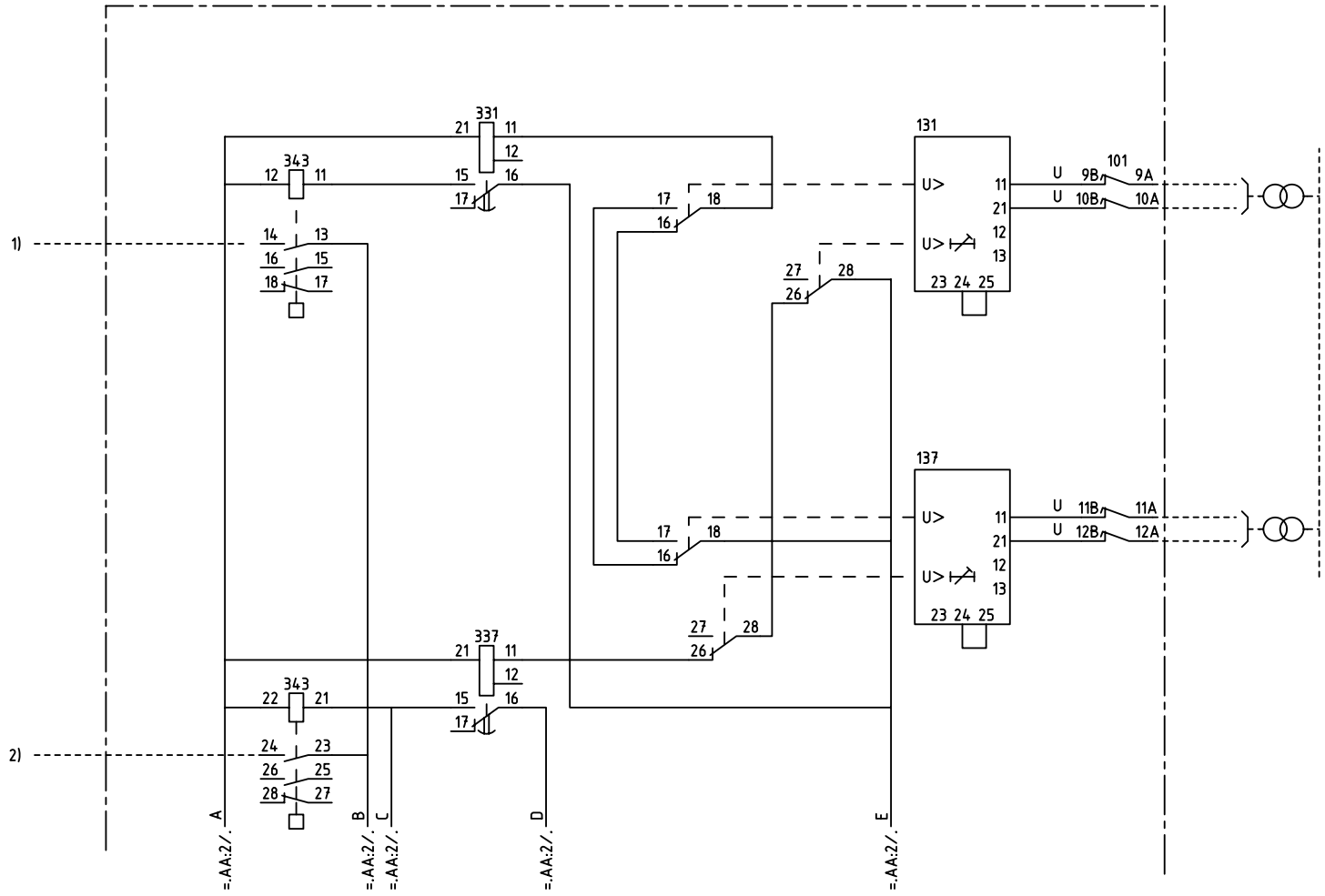

3I >
2U <

GENERATOR DEAD MACHINE PROTECTION

SKYDD MOT OAVSIKTLIG
SPÄNNINGSSÄTTNING AV GENERATORER

48C

101	107	113	119	125	131	137	143
					331	337	343

4U

101	RTXP 18
107	RXTUG 22H
113, 119, 125	RXIDK 2H
131, 137	RXEDA 1
143	RXMS 1
331, 337	RXKA 1
343	RXSF 1

1) ALARM, FUSE FAILURE
SIGNAL, SÄKRINGSAVBROTT

2) ALARM, TRIPPING
SIGNAL, UTLÖSNING

3) TRIPPING ETC.
UTLÖSNING M.M.

4) LOSS OF AUXILIARY VOLTAGE
BORTFALL AV HJÄLPSPÄNNING

We reserve all rigths in this document and in the information contained therein. Reproduction, use or disclosure to third parties without express authority is strictly forbidden. © ABB Network Partner AB

ELCAD ID PS/render DATE 2004-06-2223:27 1MRK 001 085-AA Issued in ARCADE

Prepared	98-06-05	C-H EINVALL/JE	
Approved	98-06-09	P JENÅKER	
Rev Ind	Revision	Reg No 7411	
Based on		Pcl 890.461	

CIRCUIT DIAGRAM/KRETSSCHEMA
RAGIK GENERATOR DEAD MACHINE PROT.
RAGIK GENERATORSKYDD

ABB Network Partner AB

Resp dep PS | Rev Ind – | Lang 82

1MRK 001 086-AA

Sheet 1
Cont 2

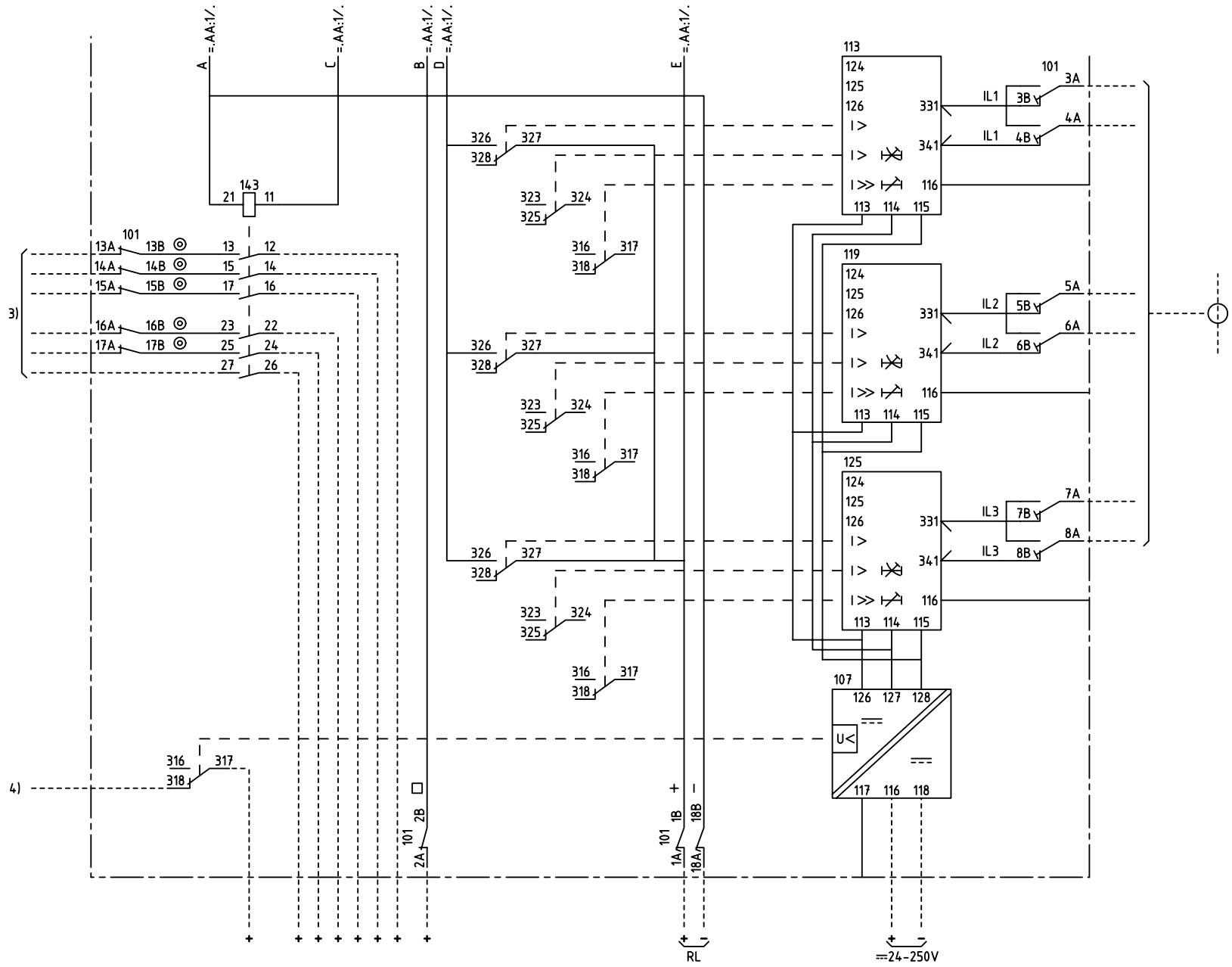

We reserve all rigths in this document and in the information contained therein. Reproduction, use or disclosure to third parties without express authority is strictly forbidden. © ABB Network Partner AB

ELCAD ID PS/render DATE 2004-06-2223:27 Issued in ARCADE

		Prepared 98-06-05	C-H EINVALL/JE	CIRCUIT DIAGRAM/KRETSSCHEMA RAGIK OGENERATOR DEAD MACHINE PROT. RAGIK GENERATORSKYDD	
		Approved 98-06-09	P JENÅKER		
Rev Ind	Revision	Reg No 7411		ABB Network Partner AB	Resp dep PS / Rev Ind - / Lang 82
Based on		Pcl 890.461			1MRK 001 086-AA / Sheet 2 / Cont