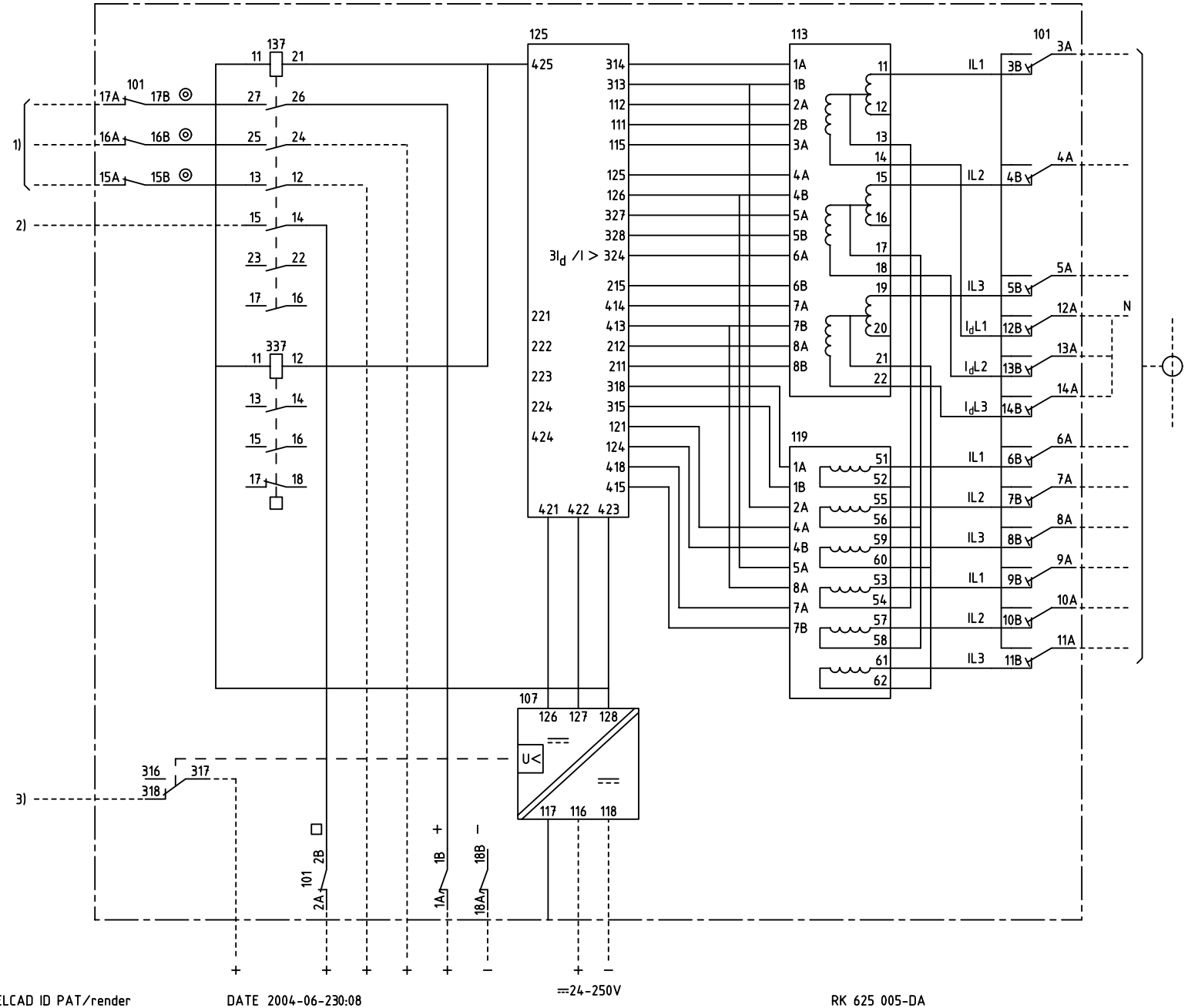

We reserve all rigths in this document and in the information contained therein. Reproduction, use or disclosure to third parties without express authority is strictly forbidden. © ABB Network Partner AB

ELCAD ID PAT/render DATE 2004-06-230:08

RK 625 005-DA

Issued in ARCADE

Prepared	85.34	C-H EINVALL	
Approved	85.34	P JENÅKER	
Rev Ind	Revision	Reg No 7454	
Based on		Pcl 890.625	

CIRCUIT DIAGRAM/KRETSSCHEMA
RADSB DIFFERENTIAL PROTECTION
DIFFERENTIALSKYDD

ABB Network Partner AB

Resp dep PAT | Rev Ind 3 96.45 | Lang 82

7454 356-DC

Sheet 1 | Cont