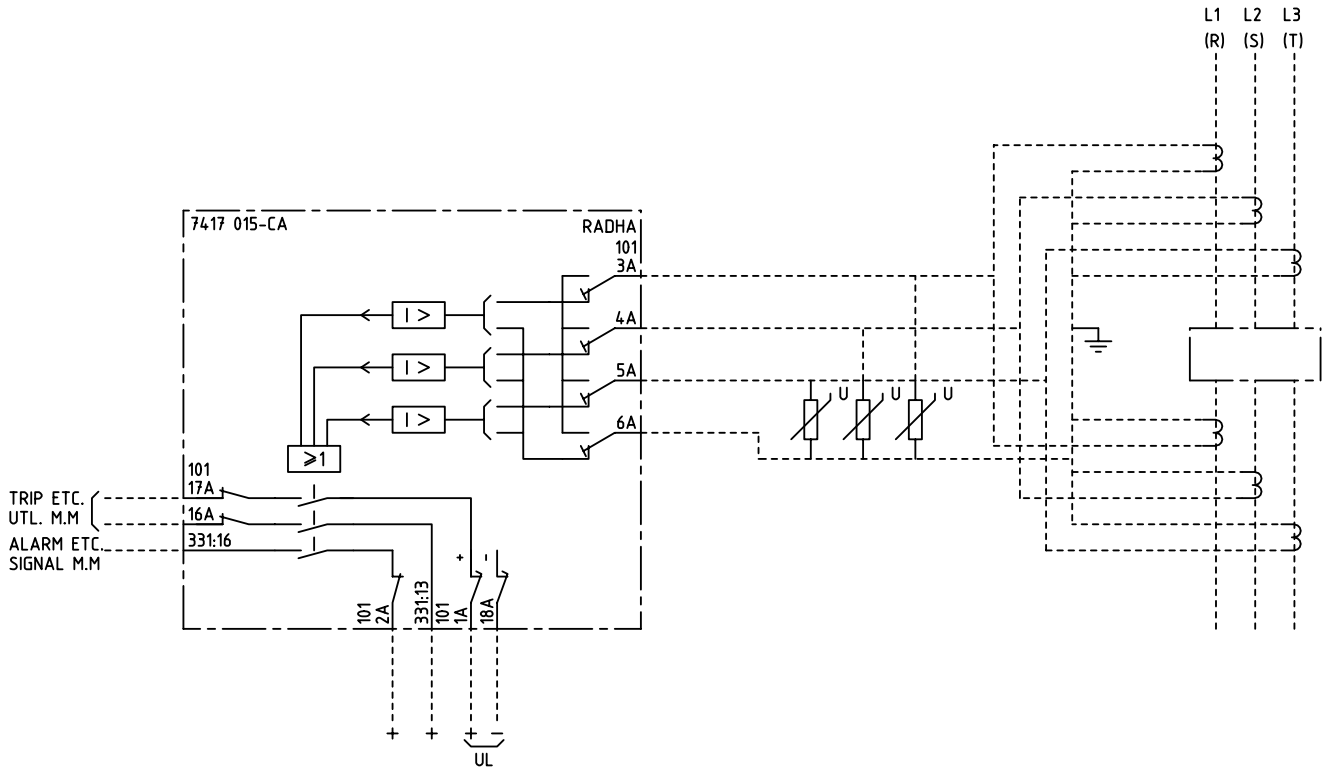

We reserve all rigths in this document and in the information contained therein. Reproduction, use or disclosure to third parties without express authority is strictly forbidden. © ABB Network Partner AB

ELCAD ID PAT/render DATE 2004-06-2222:07

Issued in ARCADE

Prepared	81 07	R ÖSTLUND	
Approved	81 07	P JENÅKER	
Rev Ind	Revision	Reg No 7417	
Based on		Pcl 890.646	

TERMINAL DIAGRAM/UTTAGSSCHEMA
RADHA DIFFERENTIAL PROTECTION
DIFFERENTIALSKYDD

ABB Network Partner AB

Resp dep PAT | Rev Ind 3 96.45 | Lang 82

7417 015-CAA

Sheet 1 | Cont