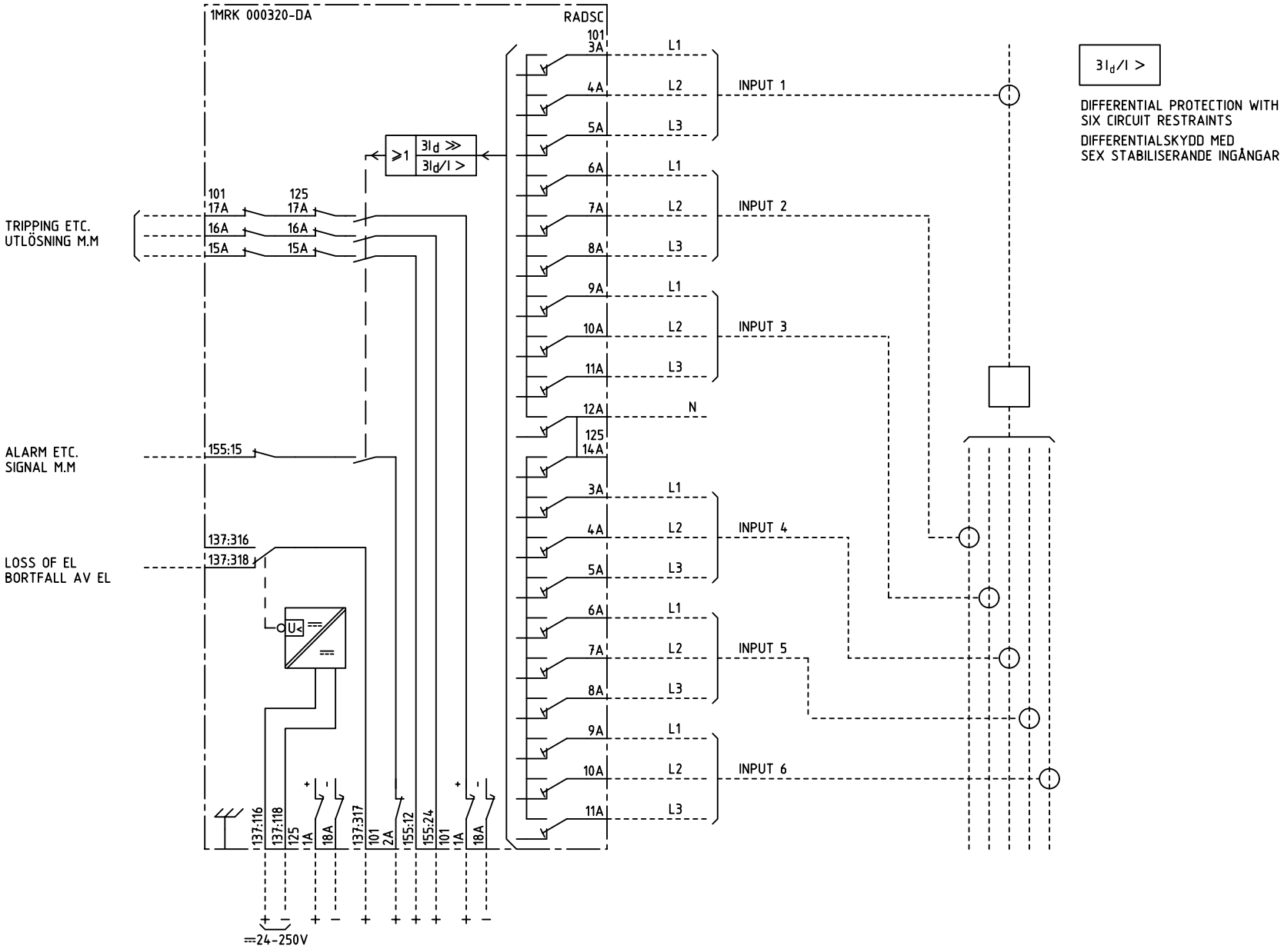

We reserve all rigths in this document and in the information contained therein. Reproduction, use or disclosure to third parties without express authority is strictly forbidden. © ABB Network Partner AB

ELCAD ID PAT/render DATE 2004-06-231:21 Issued in ARCADE

Prepared	94 44	C-H EINVALL	TERMINAL DIAGRAM/UTTAGSSCHEMA RADSC DIFFERENTIAL PROTECTION RADSC DIFFERENTIALSKYDD
Approved	94 44	P JENÅKER	
Rev Ind	Revision	Reg No 1MRK	ABB Network Partner AB
Based on		Pcl 890.000	

Resp dep PAT | Rev Ind 1 96 45 | Lang 82 | Sheet 1 | Cont

1MRK 000 320-DAA