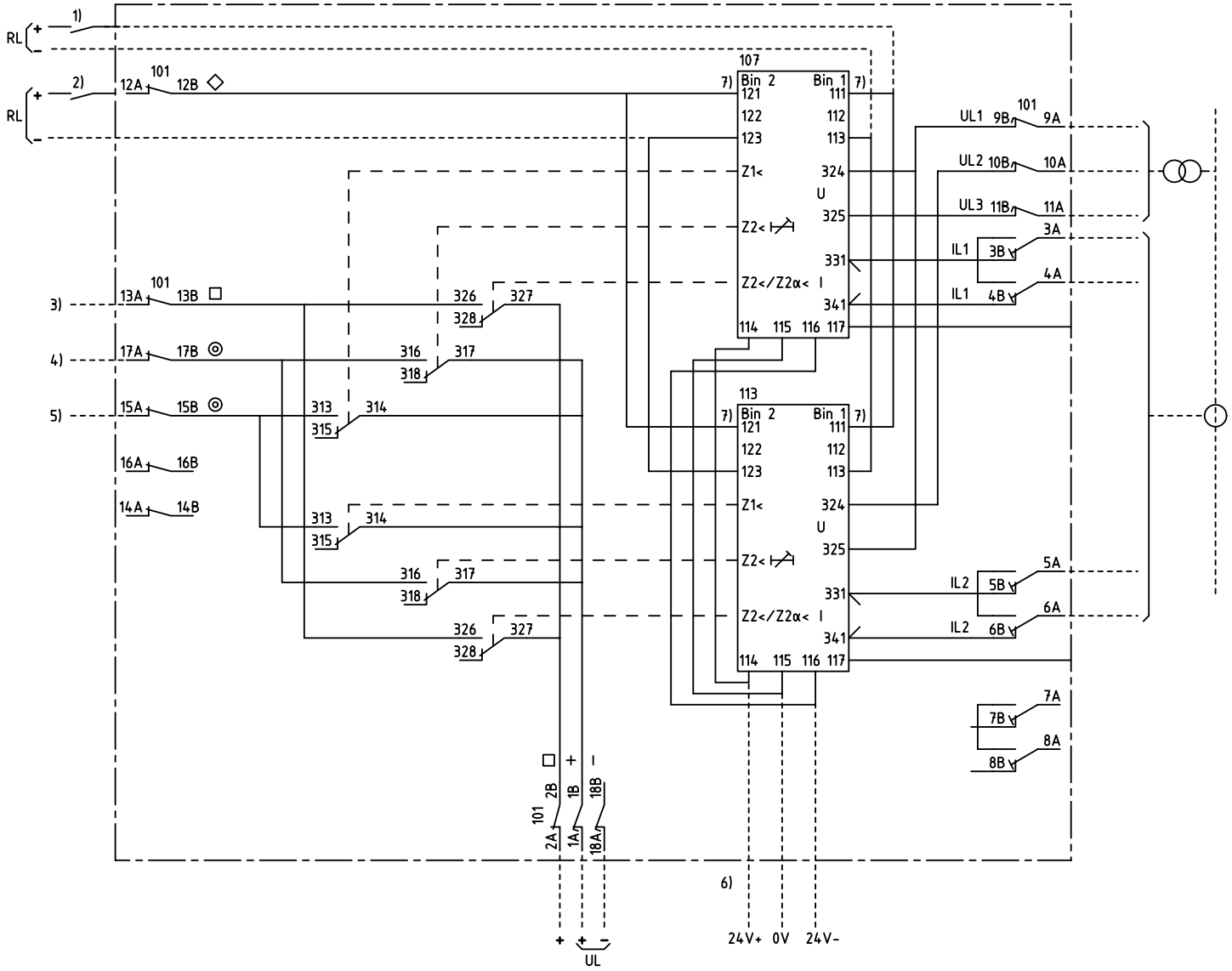

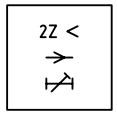

2-PH UNDERIMPEDANCE PROTECTION
DELAYED

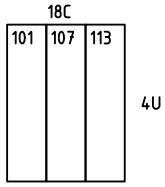

101	RTXP 18
107,113	RXZK 22H

1) BLOCKING OF ALL THE FUNCTIONS EXCEPT Z2α< , FUNCTION Z2< CHANGES TO AN INSTANTANEOUS FUNCTION.

2) RESETTING OF INDICATION

3) UNDERIMPEDANCE Z2<</Z2α<, START

4) UNDERIMPENANCE Z2<, TRIPPING

5) UNDERIMPEDANCE Z1<, TRIPPING

6) MUST BE ENERGIZED FROM RXTUG 21/22H

7) CONNECTED FOR RL=110-220V DC
CHANGE FROM 111 TO 112 AND
121 TO 122 AT RL=48-60V DC

We reserve all rigths in this document and in the information contained therein. Reproduction, use or disclosure to third parties without express authority is strictly forbidden.© ABB Automation Technologies AB

1MRK 001064-GA

Customer drw no	Prep.	PTUA/ TPTD	Eriksson Jill	2000-11-24	Circuit Diagram
	Appr.	PTUA/ TATD	Karlsson Roger	2001-03-27	2-phase underimpedance protection
	Resp. dept	PTUA/ TPTD			
Based on	ABB Automation Technologies				Documentnumber 1MRK001065-GA

Lang.	Rev.	Sheet	Cont. sh/ No of sh
en	-	1	

Documentstatus: Approved