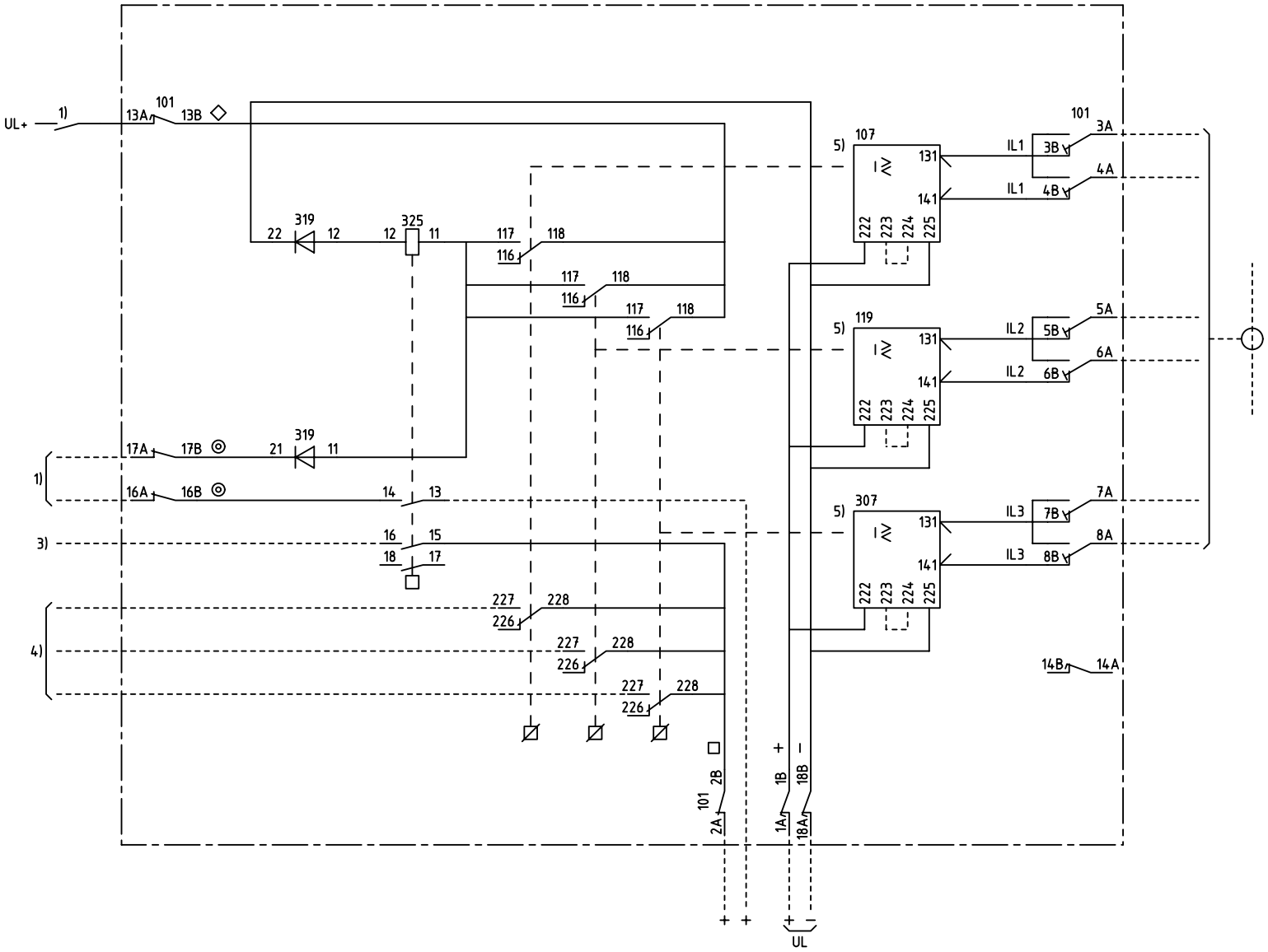

3 I >

3-PHASE OVERCURRENT PROTECTION, INSTANTANEOUS

3-FAS ÖVERSTRÖMSSKYDD, MOMENTANT

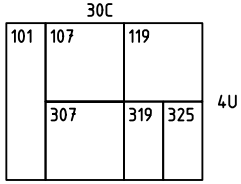

101	RTXP 18
107 119 307	RXIG 2
319	RXTDA 1
325	RXSF 1

1) ENABLING ETC.
FRIGIVNING M.M.

2) TRIPPING ETC.
UTLÖSNING M.M.

3) ALARM ETC.
SIGNAL M.M.

4) BLOCK INDICATING ETC.
BLOCKERING,INDIKERING M.M.

5) 223-224 CONNECTED AT
UL= ——24 RESP——110-125V
223-224 FÖRBUNDNA VID
UL= ——24 RESP——110-125V

We reserve all rigths in this document and in the information contained therein. Reproduction, use or disclosure to third parties without express authority is strictly forbidden. © ABB Network Partner AB

ELCAD ID PAT/render DATE 2004-06-221:28

RK 651 001-DB

Issued in ARCADE

Prepared	73 30	C-H EINVALL	
Approved	73 30	P JENÅKER	
Rev Ind	Revision	Reg No 7431	
Based on		Pcl 890.651	

CIRCUIT DIAGRAM/KRETSSCHEMA
OVERCURRENT PROTECTION
ÖVERSTRÖMSSKYDD

ABB Network Partner AB

Resp dep PAT | Rev Ind 4 96 45 | Lang 82

7431 0001-DB

Sheet 1 | Cont