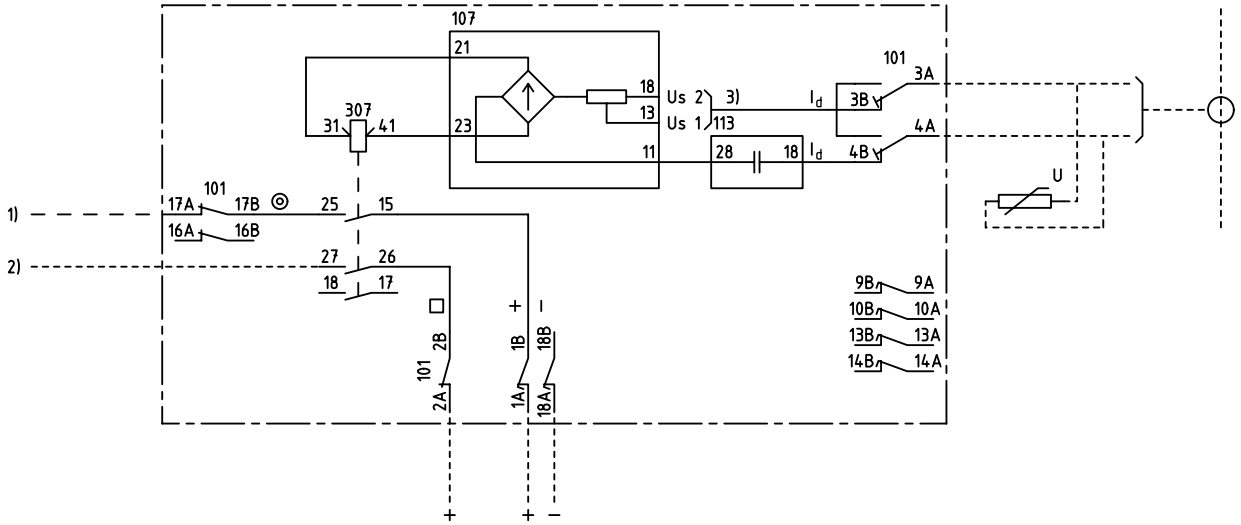

I_d >

HIGH IMPEDANCE SINGLE-PHASE RESTRICTED EARTH-FAULT PROTECTION FOR Us 19 TO 100V

ENFAS HÖGIMPEDANS JORDFELSDIFFERENTIAL-SKYDD FÖR Us 19 TILL 100V

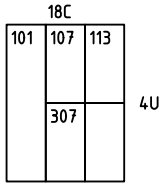

101 RTXP 18
107 RXTLA 1
113 RXTCA 1
307 RXID 1

1) TRIP ETC.
UTLÖSNING M.M

2) ALARM ETC.
SIGNAL M.M

3) CONNECTED TO 13 (Us1) AT DELIVERY
VID LEVERANS ANSLUTEN TILL 13 (Us1)

We reserve all rigths in this document and in the information contained therein. Reproduction, use or disclosure to third parties without express authority is strictly forbidden. © ABB Network Partner AB

ELCAD ID TPTD/render DATE 2004-06-222:08

RK 646 007-AA

Issued in ARCADE

Prepared 74.24	R ÖSTLUND	CIRCUIT DIAGRAM/KRETSSCHEMA RADHD EARTH-FAULT PROTECTION JORDFELSSKYDD	
Approved 74.24			
Rev Ind / Revision	Reg No 7417	ABB Network Partner AB	Resp dep TPTD / Rev Ind 6 96.45 / Lang 82
Based on	Pcl 890.646		7417 005-AA / Sheet 1 / Cont