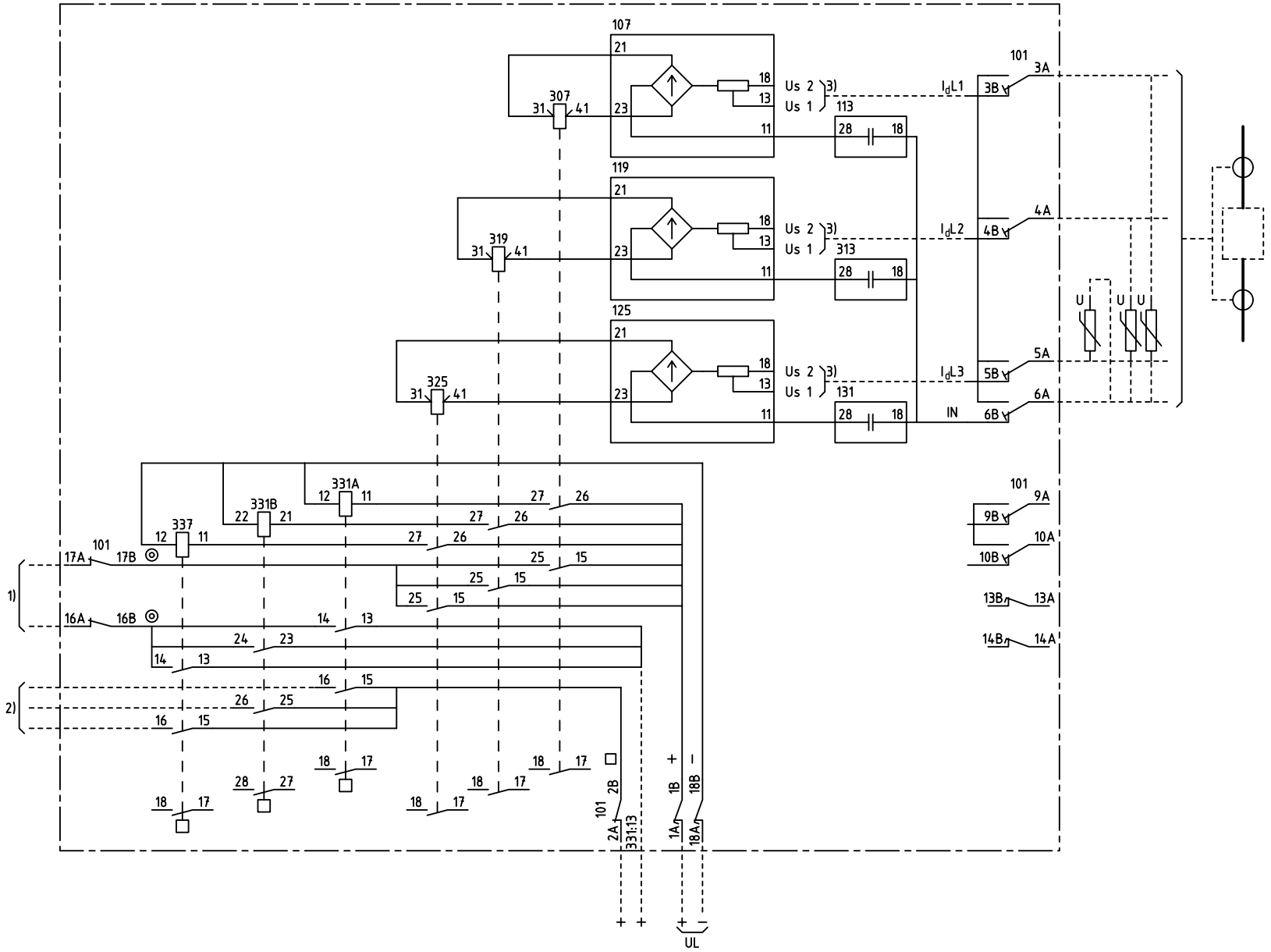

$3I_d >$

3-PHASE HIGH-IMPEDANCE DIFFERENTIAL PROTECTION FOR Us 19 TO 100V WITH PHASE INDICATING

3-FAS HÖGIMPEDANS DIFFERENTIALSKYDD FÖR Us 19 TILL 100V MED FASINDIKERING

42C

101	107	113	119	125	131		4U
	307	313	319	325	331	337	

101	RTXP 18
107 119 125	RXTLA 1
113 131 313	RXTCA 1
307 319 325	RXID 1
331 337	RXSF 1

1) TRIP ETC.
UTLÖSNING M.M

2) ALARM ETC.
SIGNAL M.M

3) CONNECTED TO 13 (Us 1) AT DELIVERY
VID LEVERANS ANSLUTEN TILL 13 (Us 1)

We reserve all rigths in this document and in the information contained therein. Reproduction, use or disclosure to third parties without express authority is strictly forbidden. © ABB Network Partner AB

ELCAD ID PAT/render DATE 2004-06-227:36

RK 646 009-KA

Issued in ARCADE

Prepared	84 05	R ÖSTLUND	
Approved	84 05	P JENÅKER	
Rev Ind	Revision	Reg No 7417	
Based on		Pcl 890.646	

CIRCUIT DIAGRAM/KRETSSCHEMA
RADHA DIFFERENTIAL PROTECTION
DIFFERENTIALSKYDD

ABB Network Partner AB

Resp dep PAT | Rev Ind 5 96.45 | Lang 82

7417 015-KA

Sheet 1 | Cont