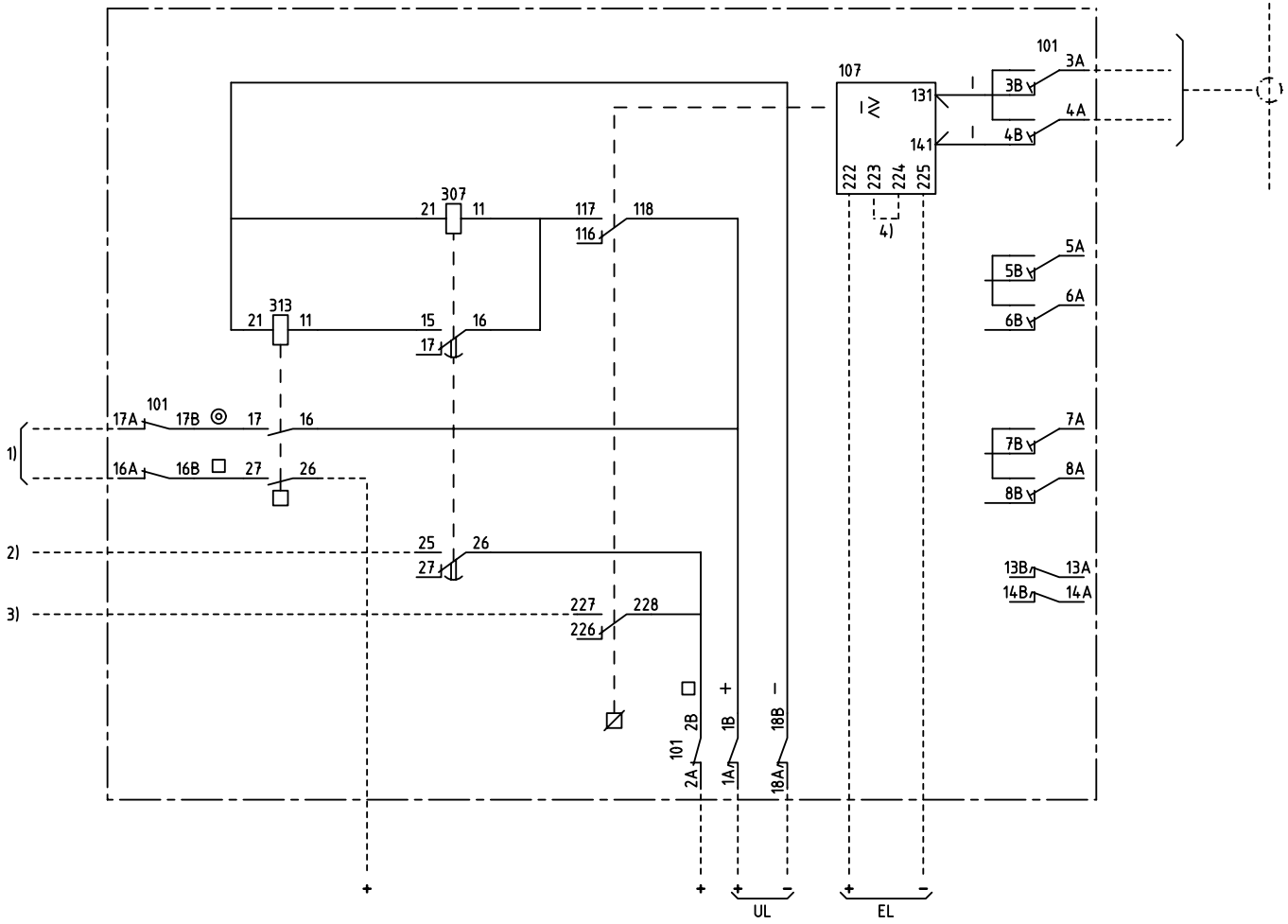

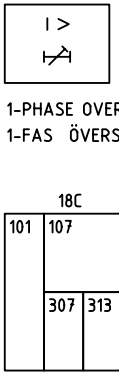

1-PHASE OVERCURRENT PROTECTION, DELAYED
1-FAS ÖVERSTRÖMSSKYDD, FÖRDRÖJT

101	RTXP 18
107	RXIG 2
307	RXKL 1
313	RXME 18

1) TRIPPING ETC.
UTLÖSNING M.M.

2) ALARM ETC.
SIGNAL M.M.

3) BLOCKING, INDICATION ETC.
BLOCKERING, INDIKERING M.M.

4) 223-224 CONNECTED AT
EL=24 RESP. 110-125V DC
223-224 FÖRBUNDNA VID
EL=24 RESP. 110-125V DC

We reserve all rigths in this document and in the information contained therein. Reproduction, use or disclosure to third parties without express authority is strictly forbidden. © ABB Network Partner AB

ELCAD ID PAT/render DATE 2004-06-2122:03 1MRK 001 037-DA Issued in ARCADE

Prepared	97-01-14	C-H Einvall/L Bergman	CIRCUIT DIAGRAM/KRETSSCHEMA
Approved	97-01-28	P Jenåker	RAIG 1-PHASE OVERCURRENT PROTECTION
			RAIG 1-FAS ÖVERSTRÖMSSKYDD
Rev Ind	Revision	Reg No 7411	ABB Network Partner AB
Based on		Pcl 890.411	

Resp dep PAT | Rev Ind – | Lang 82 | Sheet 1 | Cont

1MRK 001 038-DA